SCHOOL OF ENGINEERING AND NATURAL SCIENCES

EEE

Digital

Micro-Electronics project
Report

Name, Surname: ZUHEER AL HARIRI

Department, Student ID: EEE, 61200035

Date: 22.1.2025

1. Introduction:

- **Objective**
  The objective of this project is to design at 24-bit adder standard cell provided the final design has a worst-case delay not more than 1ns.

- **Scope**

First, to discuss the design approach followed by going over the schematic and the layout and then extracting then extracting the parasitics and finally test-bench the worst-case delay and extract the performance.

2. Design & Methodology:

- **Adder structures**

  The design of the adder structure has three main parameters being:
  {Fanout, Tracks, Logic levels}
  The aim is to minimize all three penalties however you can only choose a structure that satisfies 2 while sacrificing the other, and so different structure serve better for different applications.
  For my design I choose the Sklansky structure.

- **Reasoning for choosing Sklansky**

  Slansky adder was chosen because it provides lesser logic levels and tracks, even though it can have many fan-outs, it would also achieve decent delay results.

3. Schematic Design:

A-24-bit Sklansky adder doesn't exist but there is article[1] that highlights different designs of an 8-bit Adder and so the standard 8-bit Adder can be expanded to 24-bits adder which will also make the sign easier since it can built as blocks.
Unfortunately the paper doesn't specify the delay for the design however the delay can be approximated from another article[2] which showcases different design and technology performance parameters.
The article shows that a 16-bit Sklansky adder with 90nm TSMC has a delay of about 400ps (0.4ns) and so the 65m technology will perform better and the expected worst case delay will be less than 1ns.

Here is the general structure of the Adder: 3 8-bit (SK) adders connected in series, the article design will be followed after making sub Blocks inside the architecture which consists of {B1 Block, B2 Block, Stage0}expressed in the figure below(figure1).

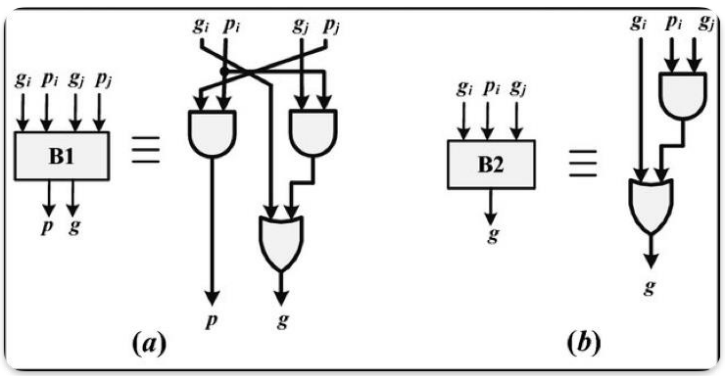

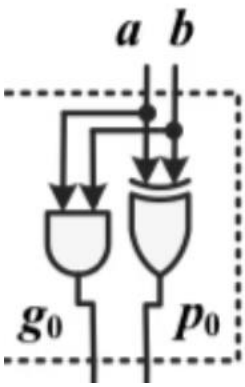

Figure1

After making the sub-blocks we can start with the 8-bit block

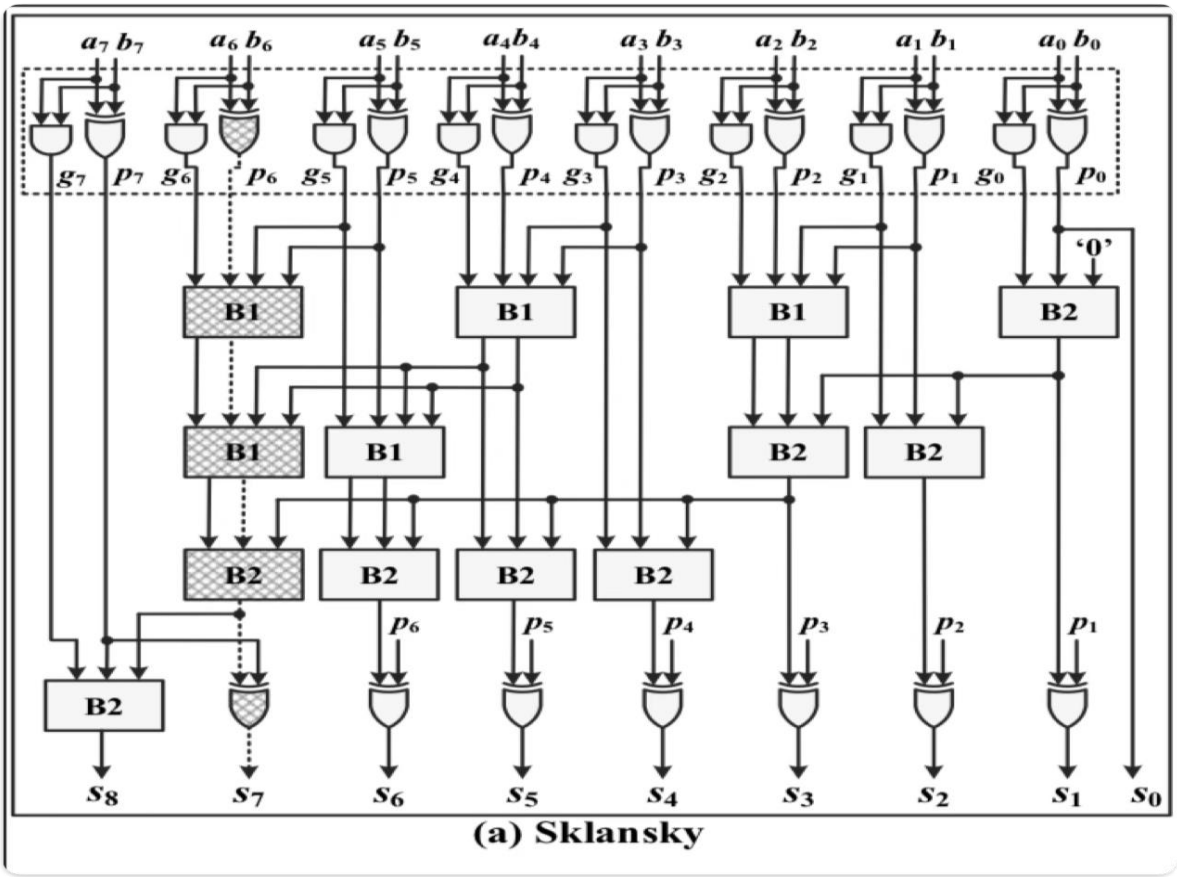

Figure2

- **Schematic cells design**

The general structure shown in **Figure2** houses some blocks and the gate count is as follows:

- Stage0 blk —> (1)XOR, (1)AND (x8)
- B1- blk. —> (2)AND (1)OR (x5)
- B2-blk —-> (1)AND (1)OR (x8)
- (7)XOR

Counting all of these results in over all: {(78)ANDs , (39)ORs, (45)XORs}

For easier implementation a cell block will be made for the following:
Stage0 blk
B1- blk
B2-blk
Shown in the figures below

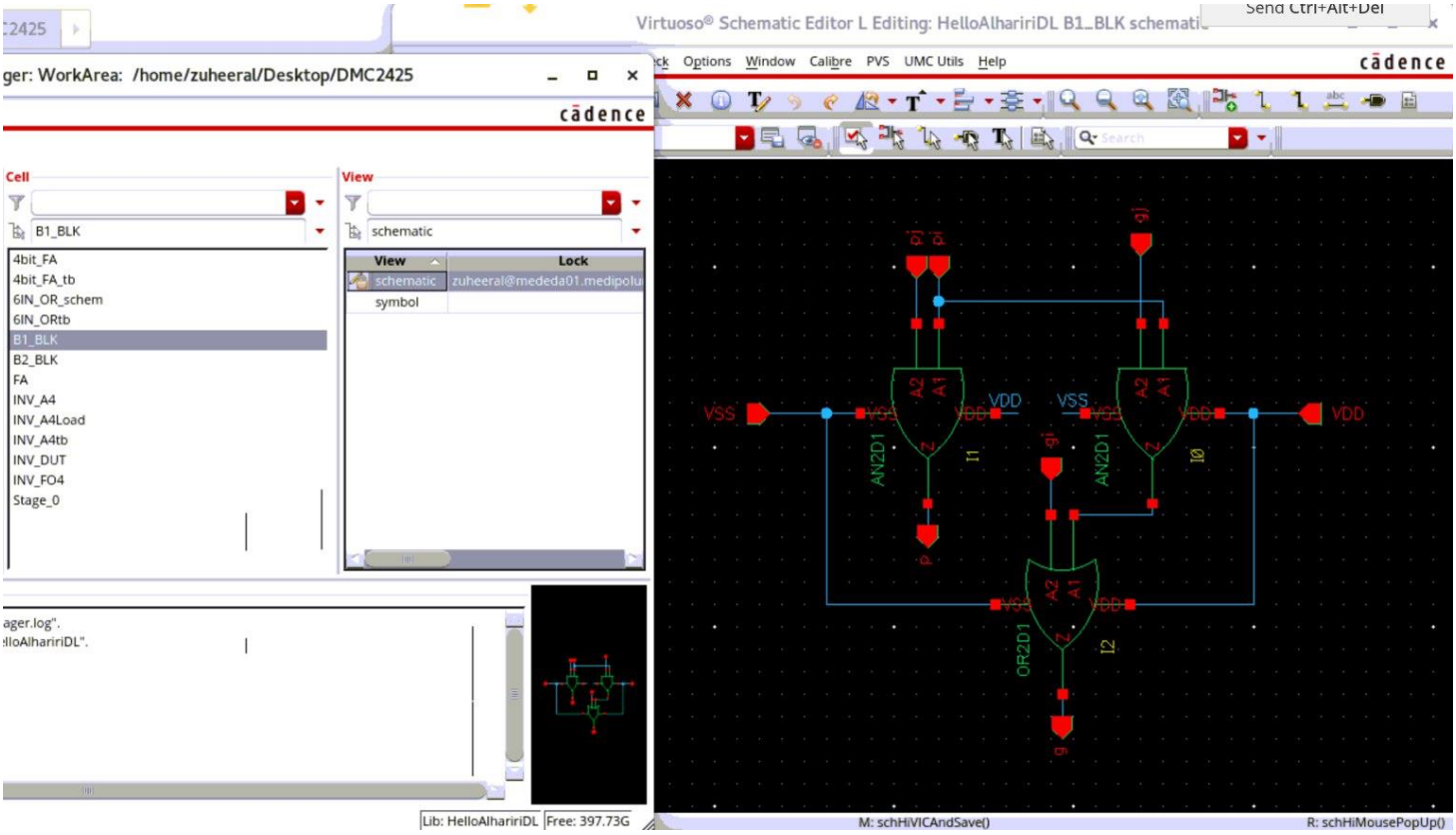
Virtuoso® Schematic Editor L Editing: HelloAlhaririDL B1_BLK schematic
ger: WorkArea: /home/zuheeral/Desktop/DMC2425
cādence
Options Window Calibre PVS UMC Utils Help
Cell
View
B1_BLK
schematic
4bit_FA
4bit_FA_tb
6IN_OR_schem
6IN_ORtb
B1_BLK
B2_BLK
FA
INV_A4
INV_A4Load
INV_A4tb
INV_DUT
INV_FO4
Stage_0
View
Lock
schematic
symbol
VSS
VDD
AN2D1
OR2D1
I1
I0
I2
Lib: HelloAlhaririDL
Free: 397.73G
M: schHiVICAndSave()
R: schHiMousePopUp()

B1 BLK

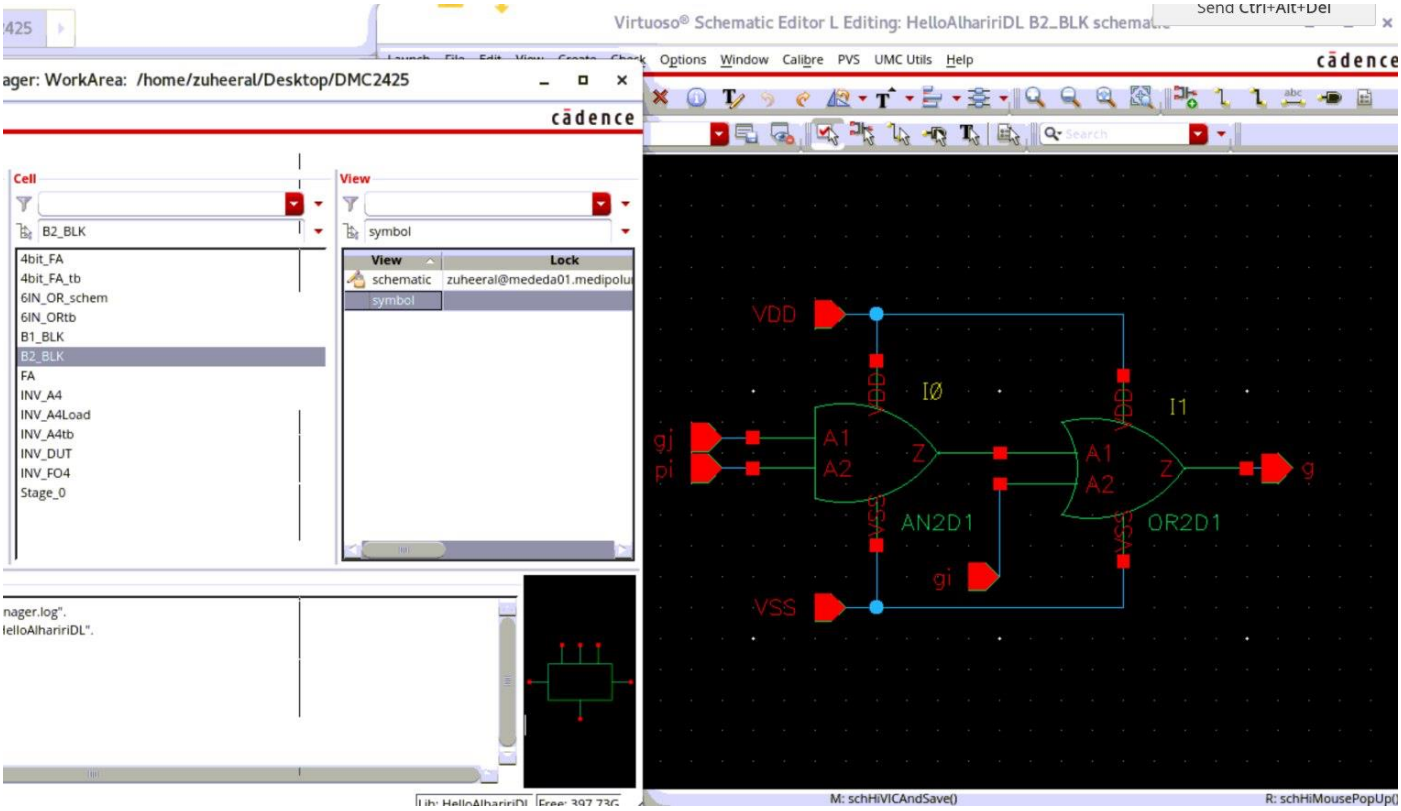

B2 BLK

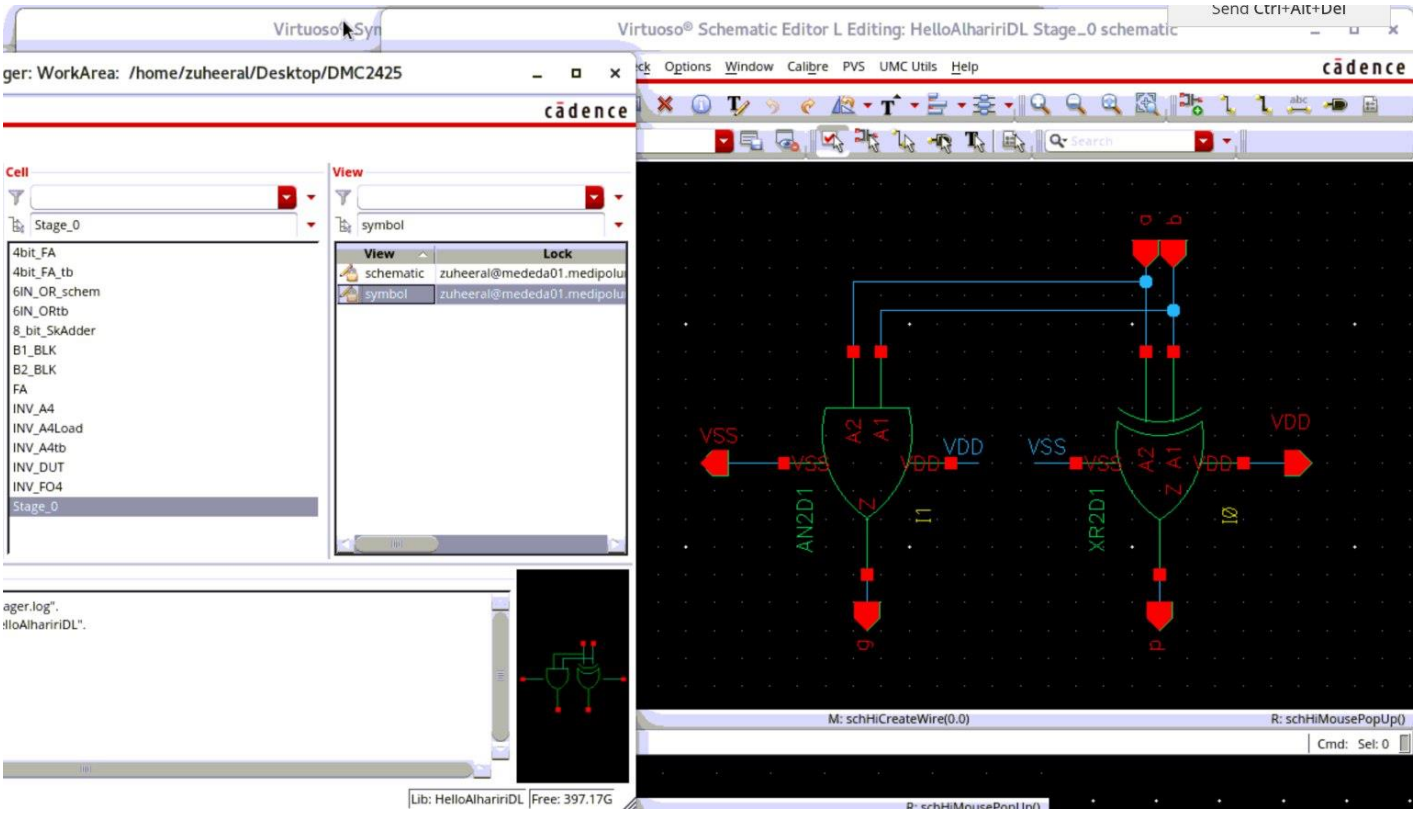

Stage0

8-bitSK adder

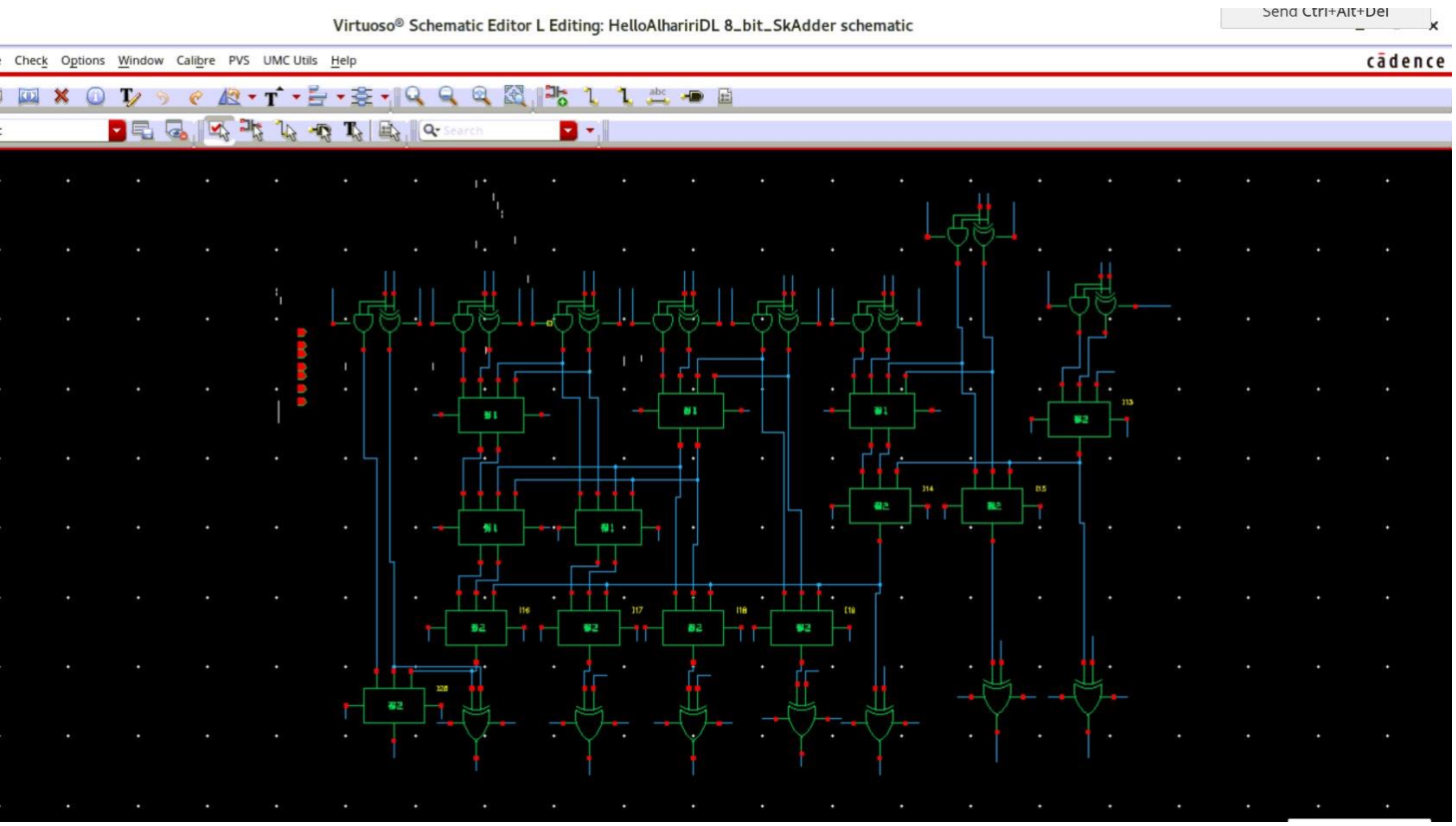

As in the article diagram we have 2-8vector inputs **A** & **B** and **CI**
And vector of 8 outputs S, and finally **CO**
Shown more clearly in the next screenshots

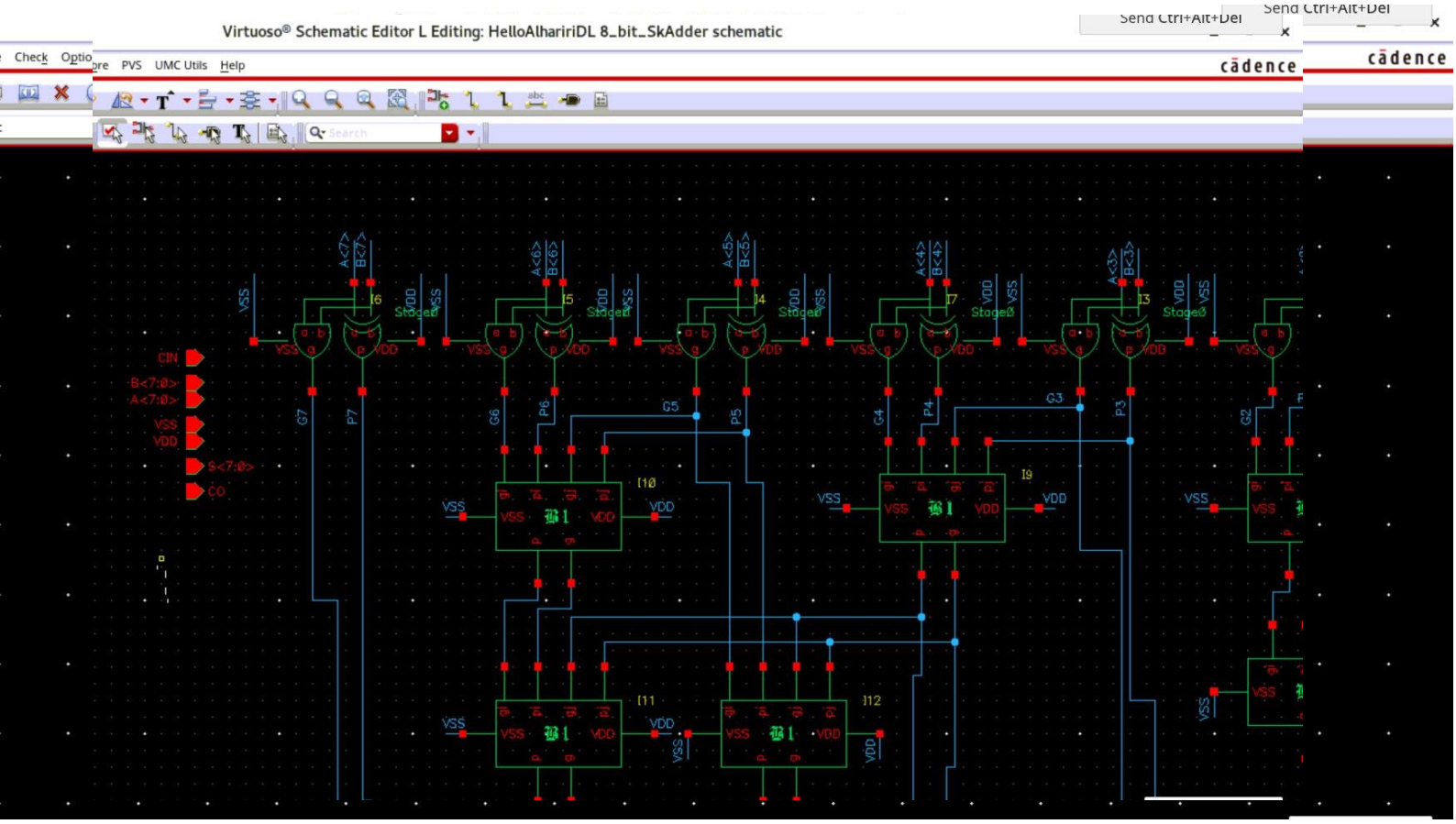

- **Layout cells design**
  Next is to proceed with the layout design, first making a layout for each cell block and then moving on to the full 8-bit Layout.

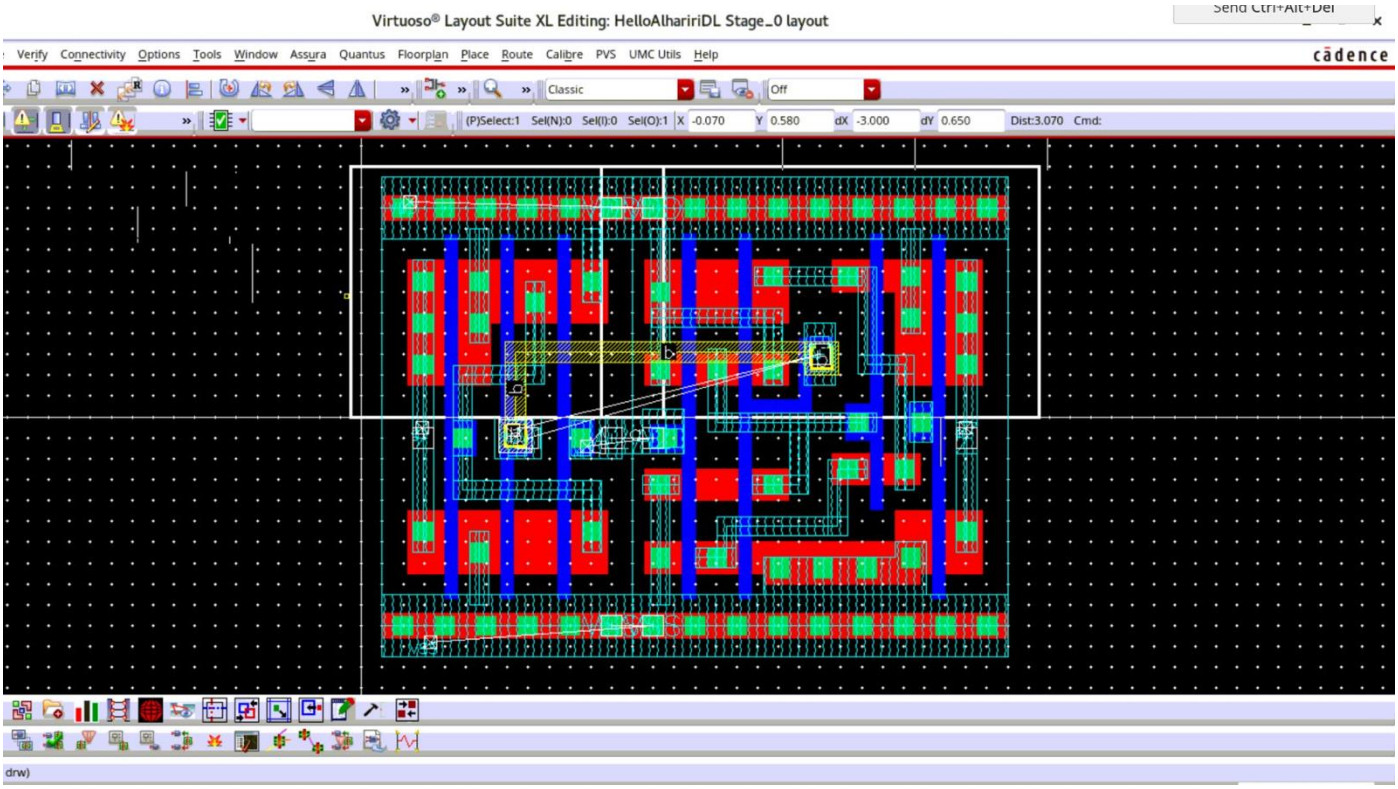

Stage0 layout

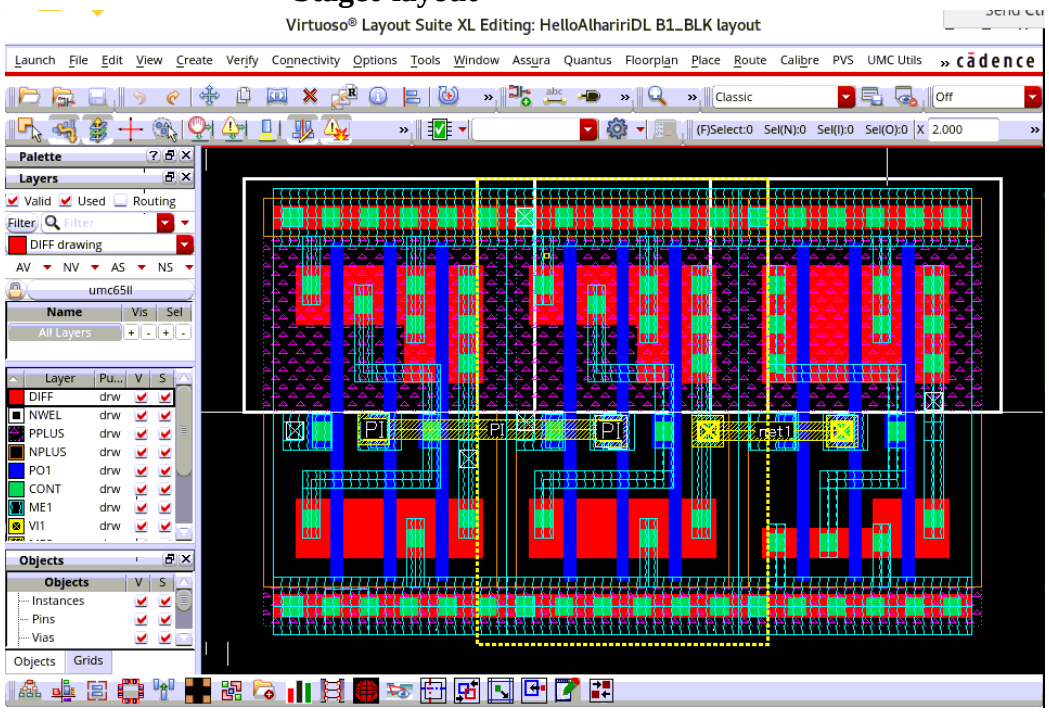

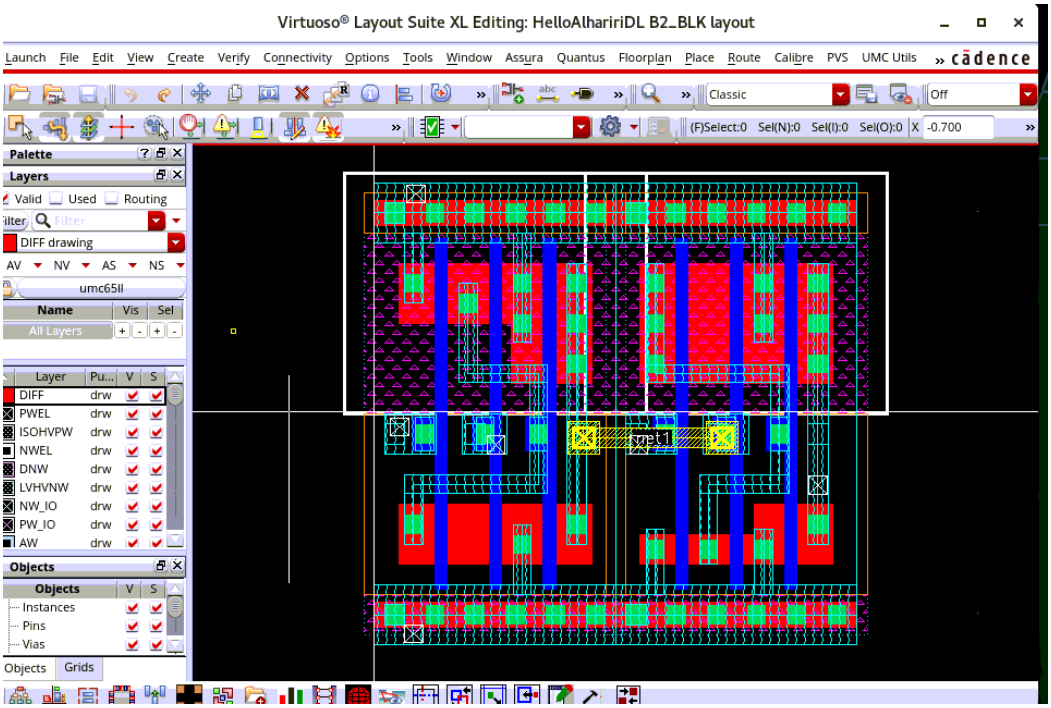

B1 & B2 blocks

Here running LVS is running into an error related to both inputs, I could not find the source of the issue as of yet.

4. <u>Layout Design</u>

After preparing each of the sub blocks layout and making the schematic for the 8-bit block, the layout of the 8-bit block can be made.
The 8bit block took a long time to complete because there were many nets to consider and due to my inconsistent routing at first and not following the protocols I suffered later and had to come up with some work around that don't look very organized but work nonetheless.

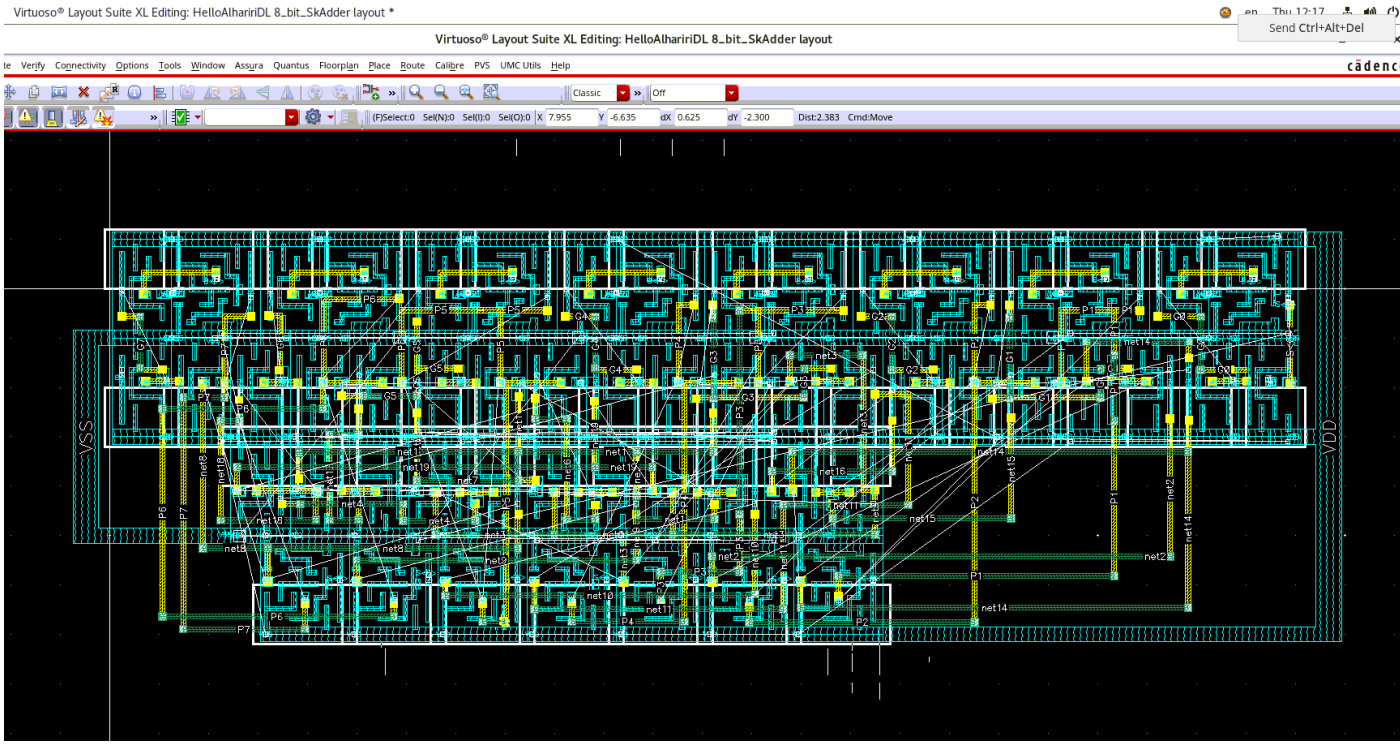

8-bit SK adder layout

After finishing the layout and fixing minor issues from after running DRC, i tried running LVS which at first didn't produce any errors, there was just a warning regarding VSS pin/label from a sub block, however after fixing it I got many errors almost 50 but I think that's due to the sub blocks not correctly testing for LVS. I then moved on with the full 24-bit SK adder.

8-bit SK layout DRC

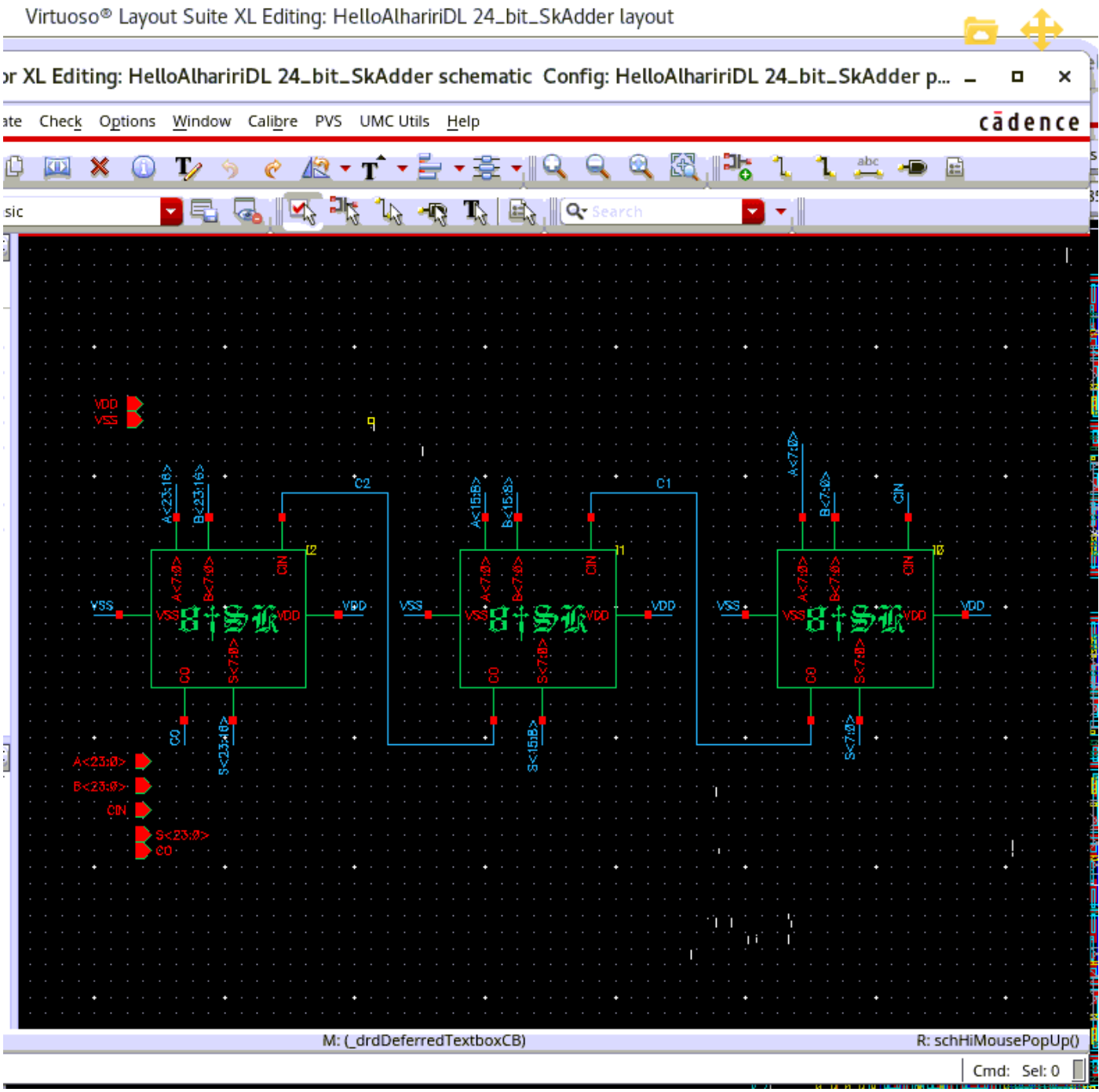

24-bit SK adder schematic

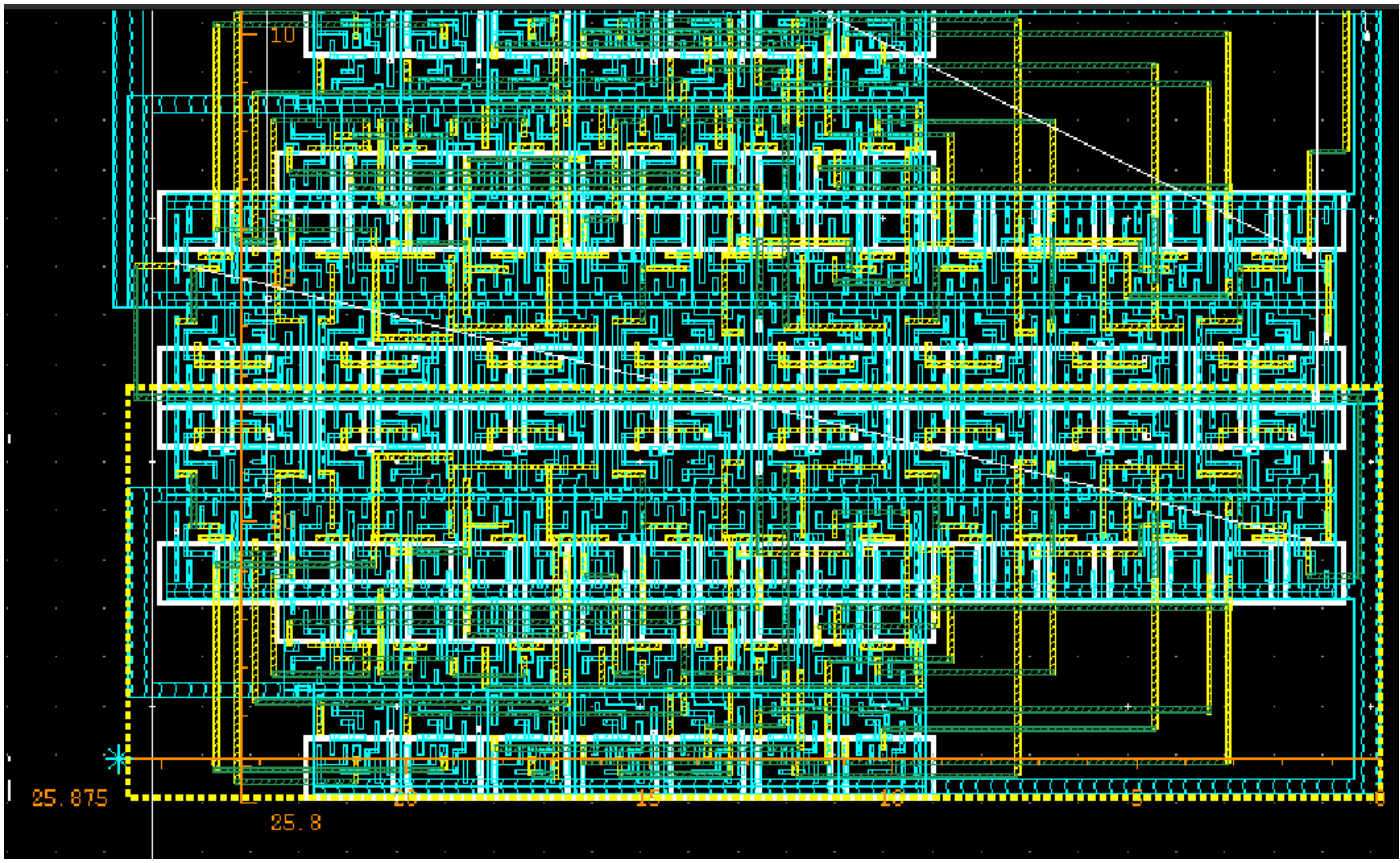

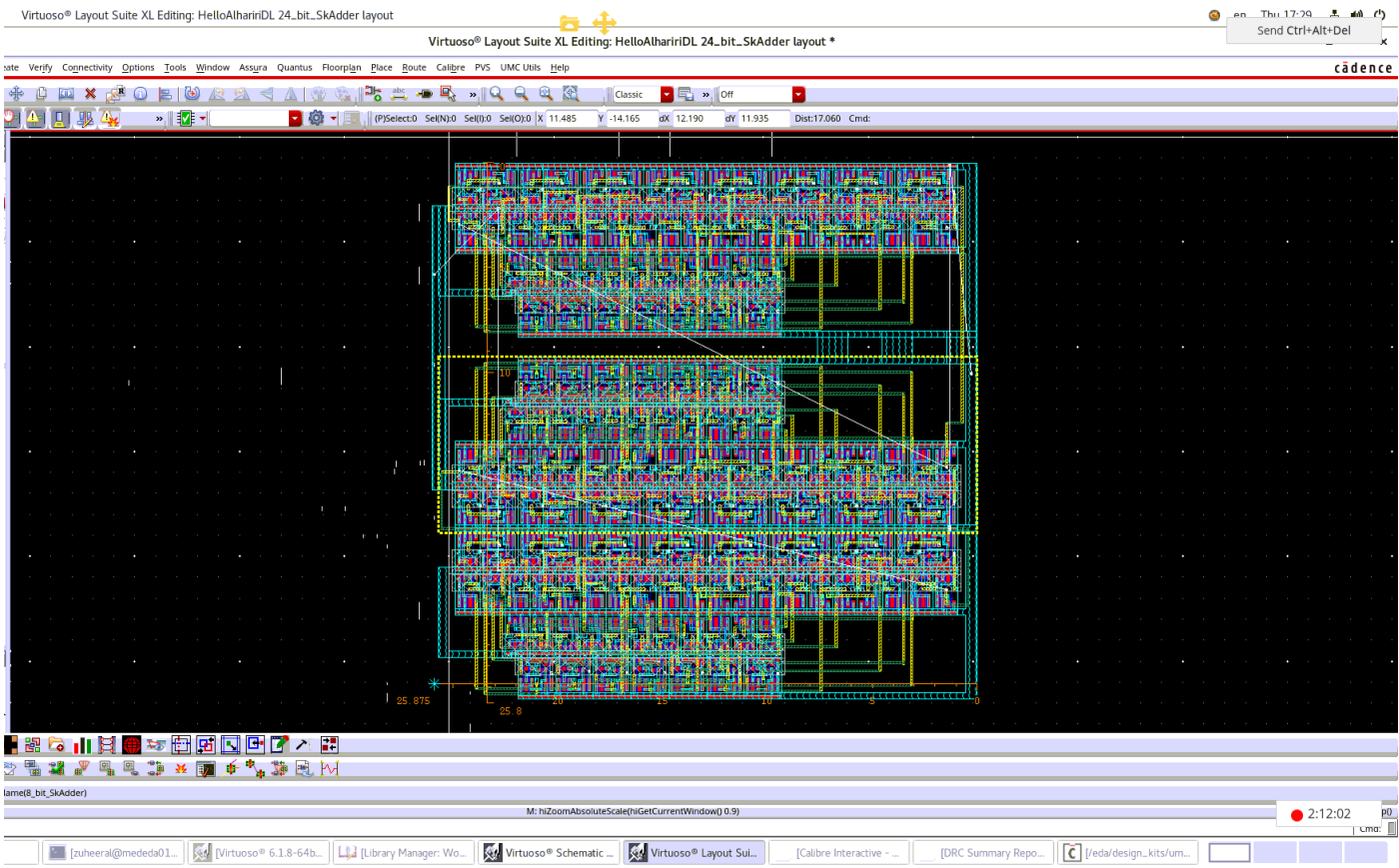

24-bit SK adder layout

As shown in the screen shot the full layout area is approximately 26x26 um

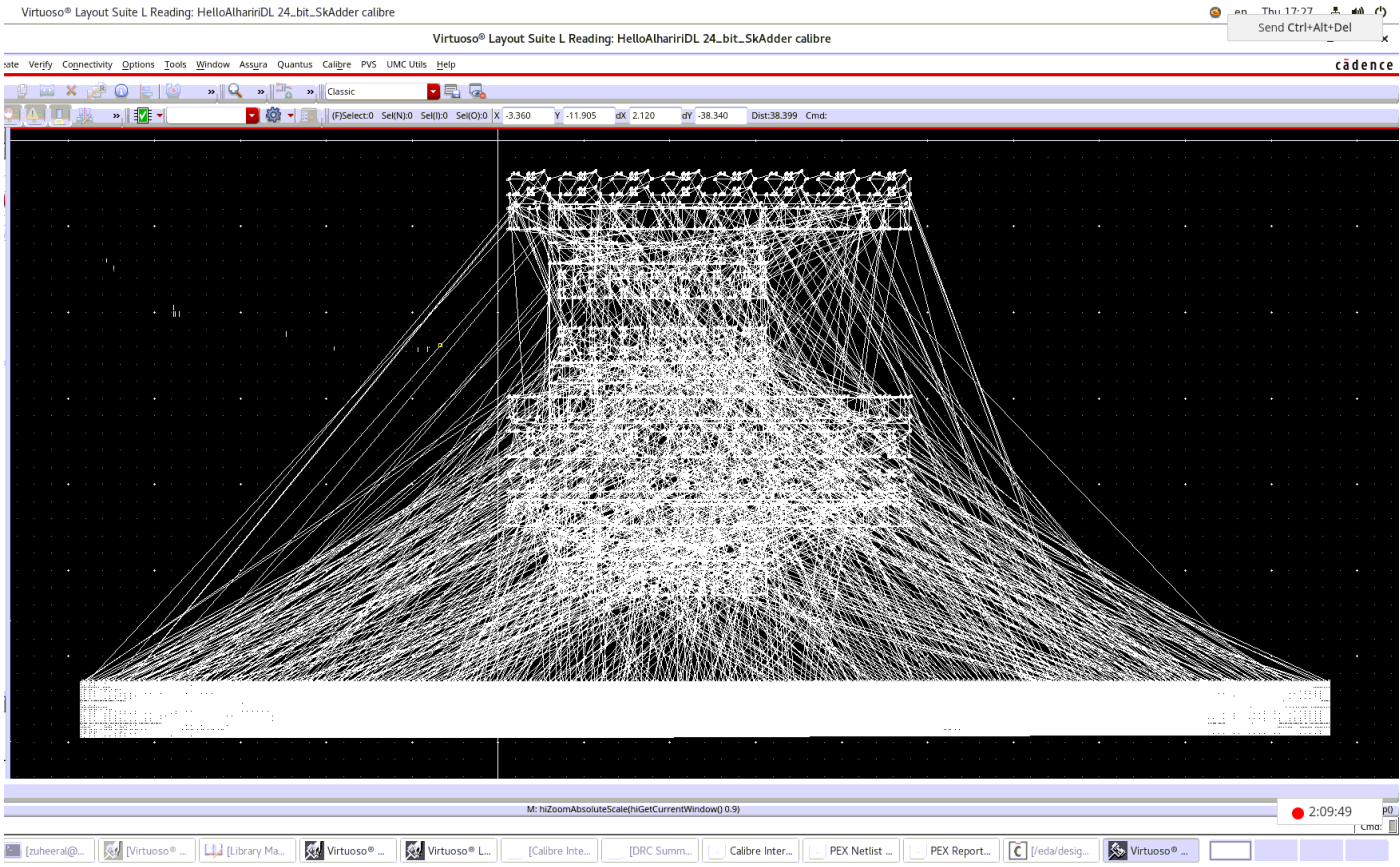

full parasitic extraction

5. Simulation Results:

For the simulation I first measured the delay for 1 8-bit block using schematic and extractions to see the difference.

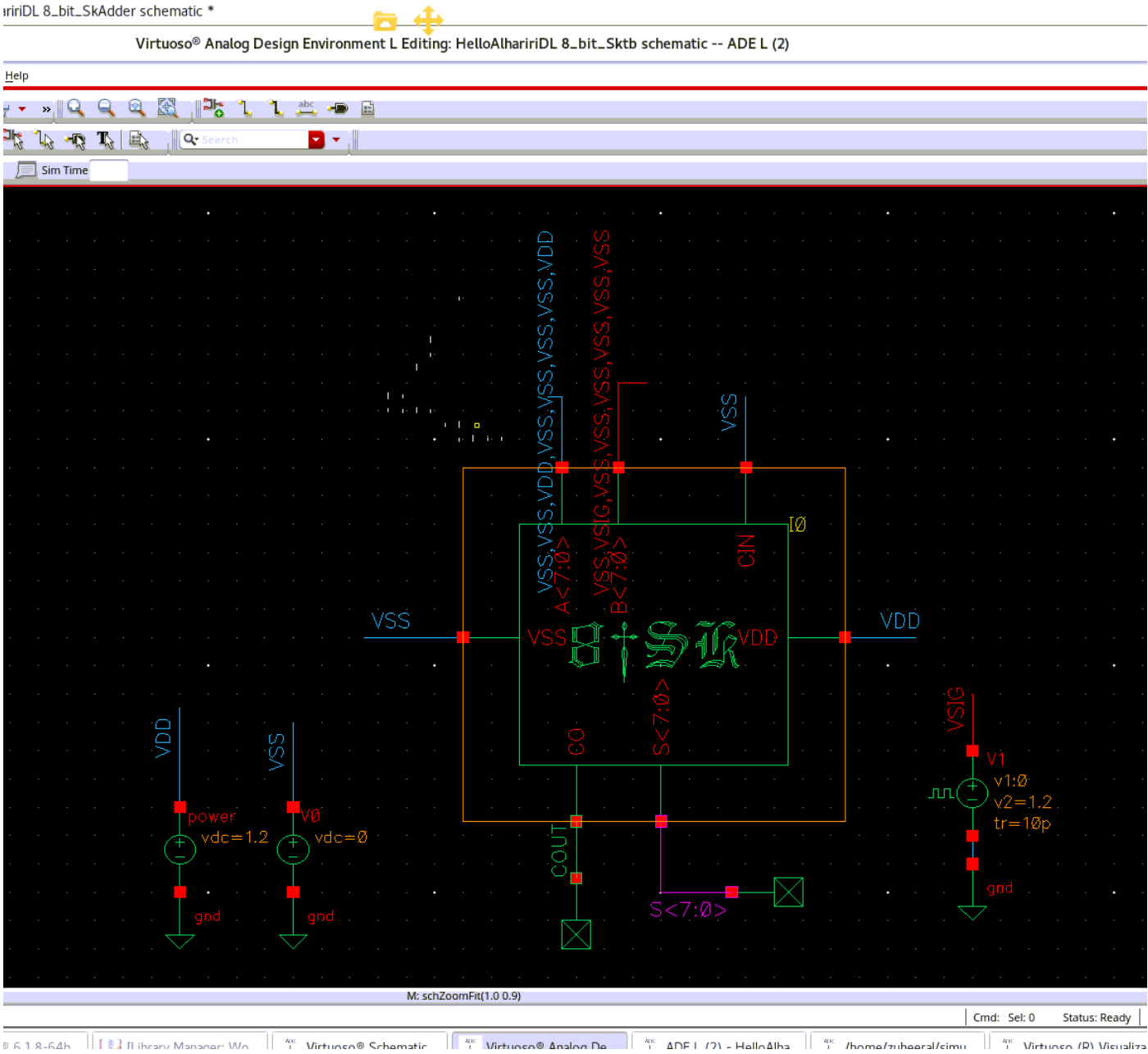

8-bit test bench schematic

The paper points input<6> to be the critical delay path for the design, so after setting up the schematic and testing a trigger signal this is the ressult

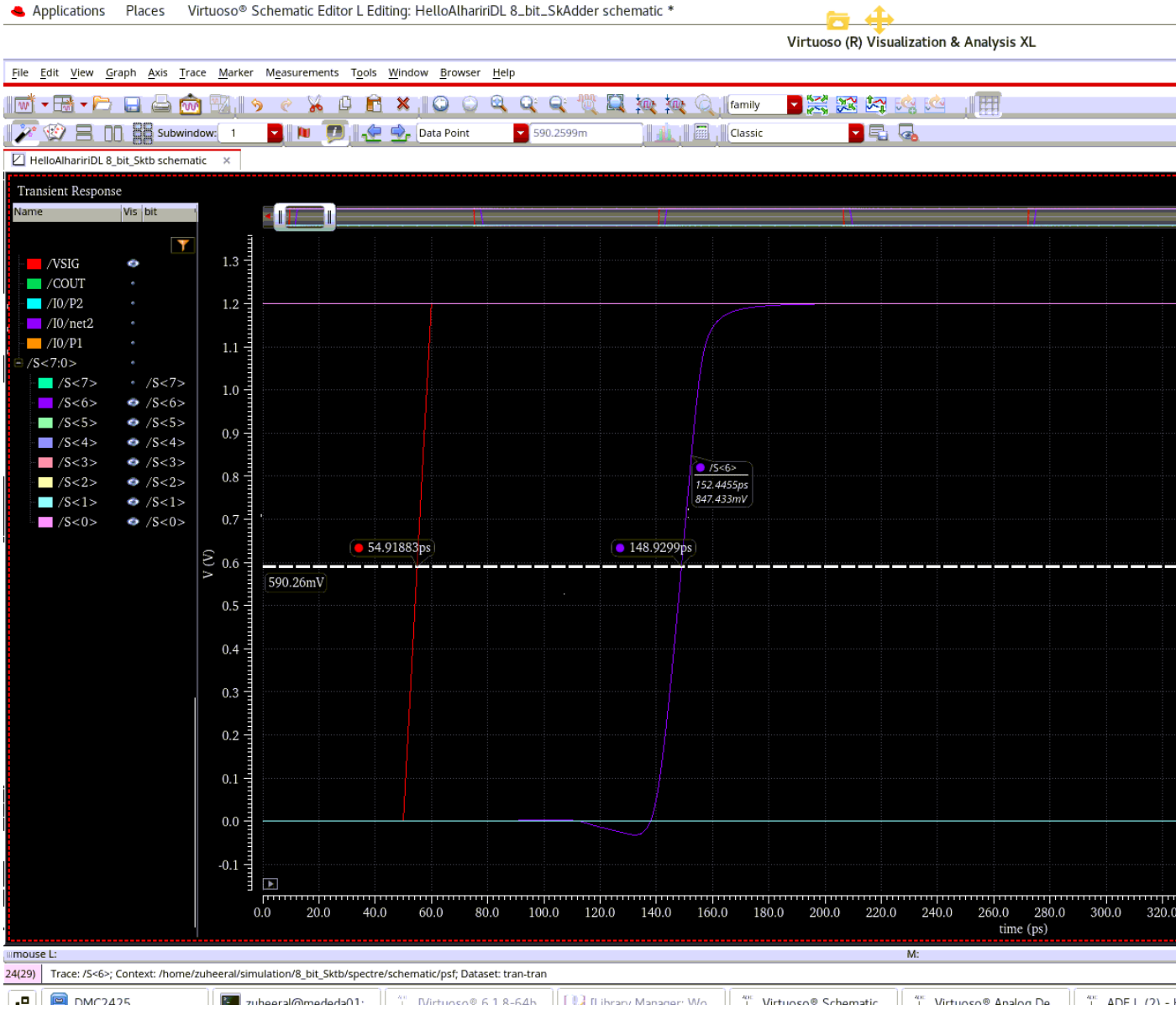

8-bit critical path simulation plot

The delay is about 100ps.

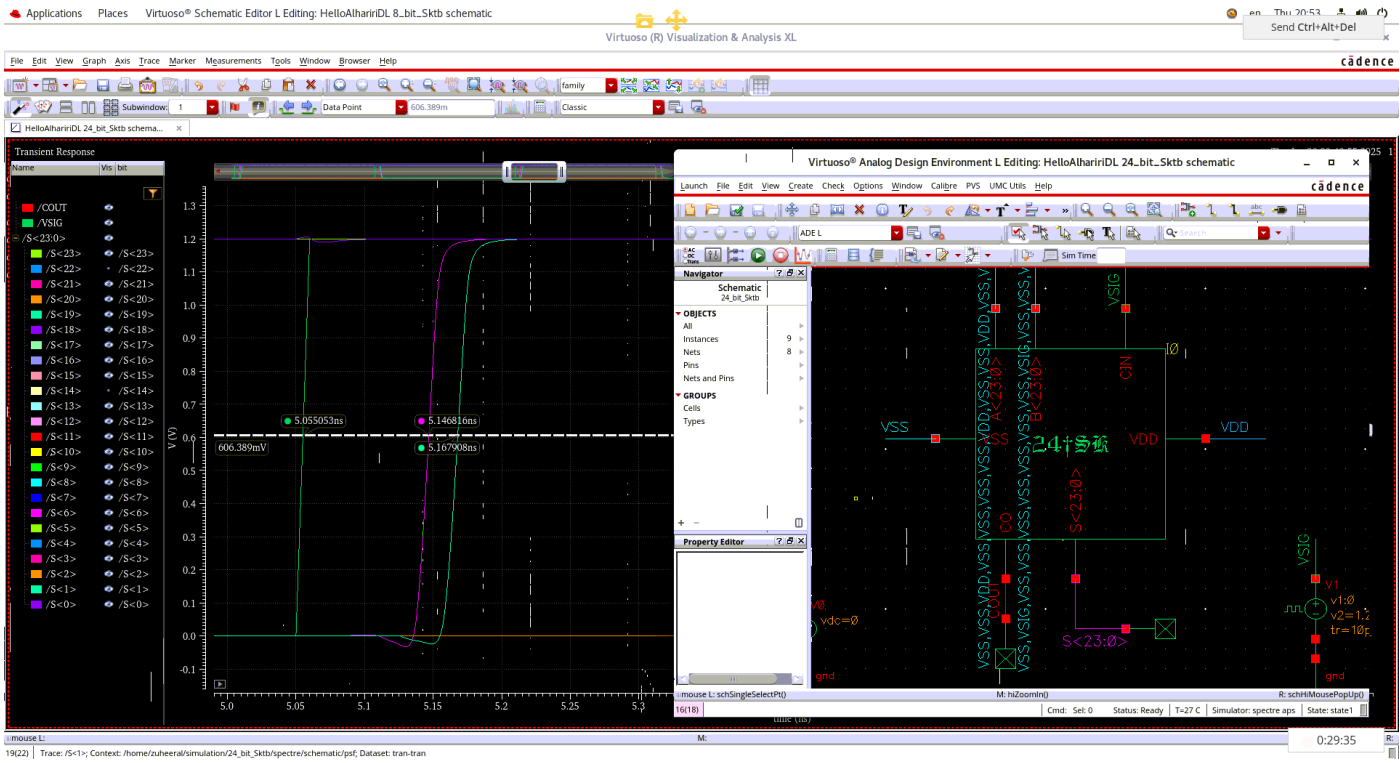

24-bit testbench simulation (no parasitic)

Running the testbench on the 24-bit resulted in similar results where the delay is 100ps

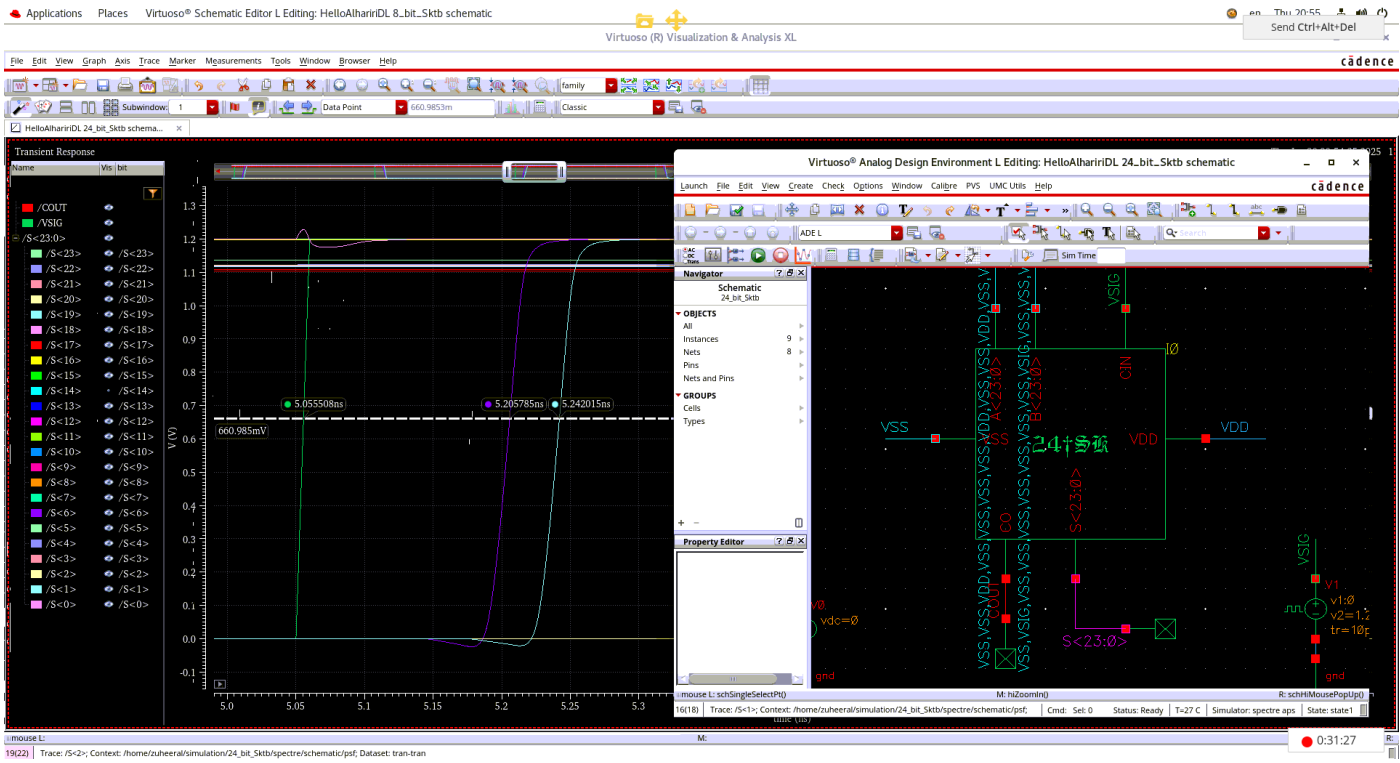

24-bit testbench simulation (with parasitic)

Adding the parasitics resulted in a delay of about 200ps, so there's a 100% increase in delay however it's still much lower than the target 1ns

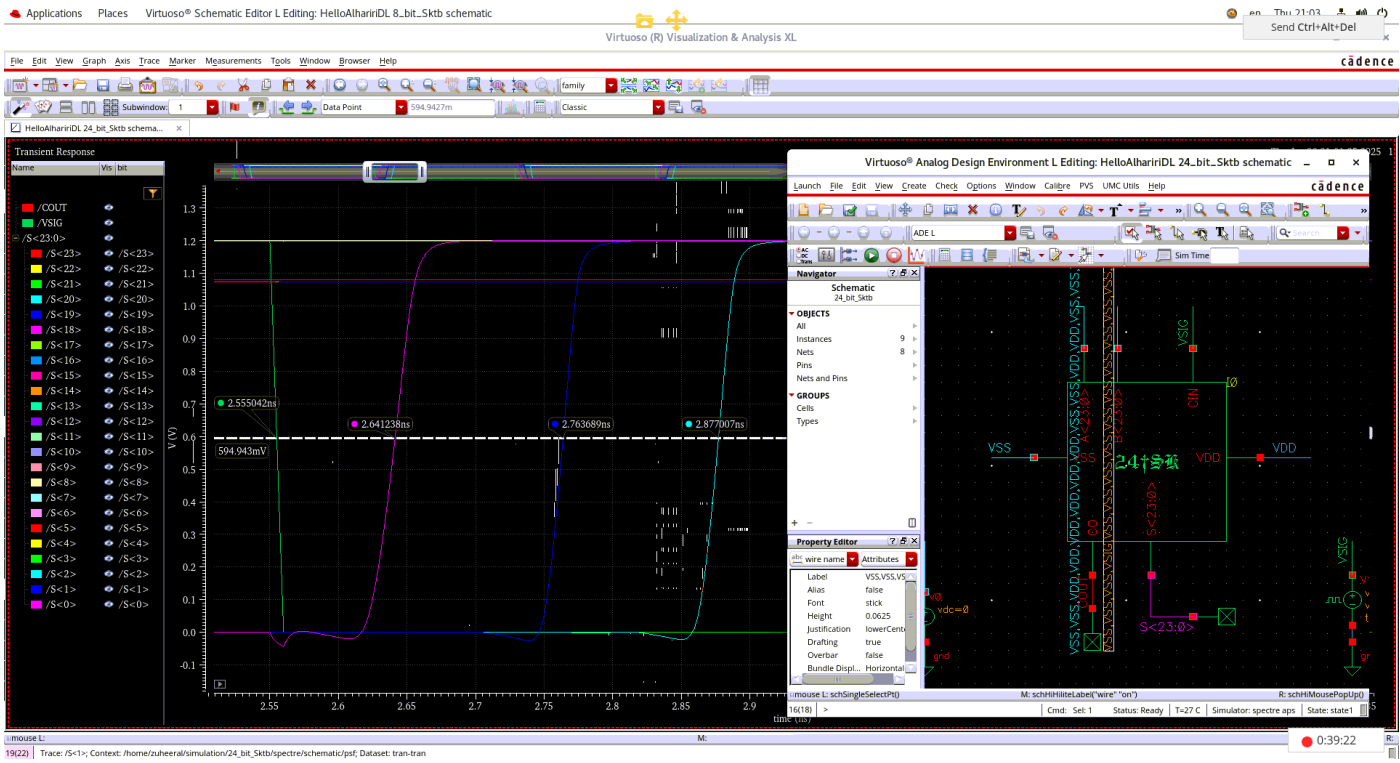

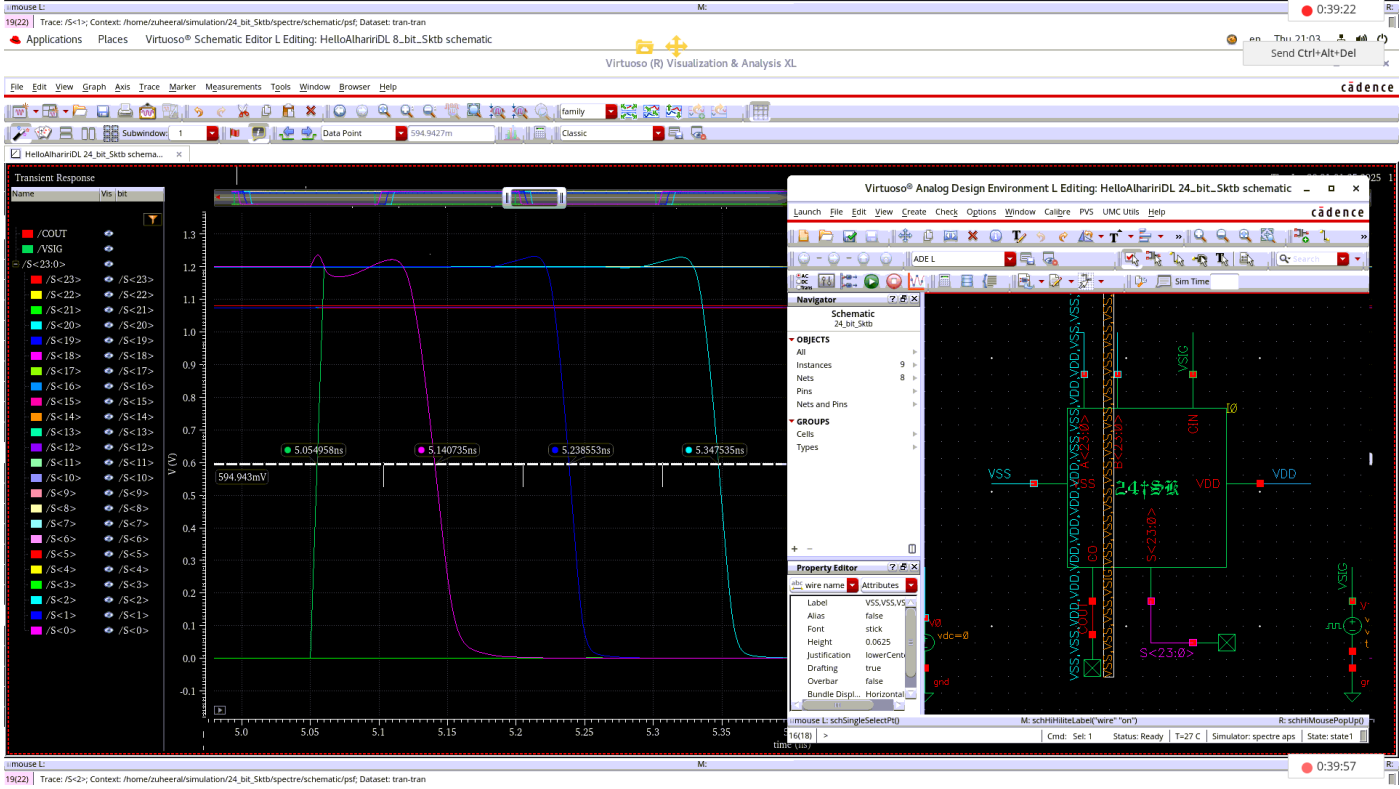

more parasitic simulation runs

6. Results Summary

Counting all of the gates in final 24-bit design: {(78)ANDs , (39)ORs, (45)XORs}

Which came from 3x[8 stage0 blocks, 5 B1 blocks, 8 B2 blocks]
The layout came down to 676um
The maximum delay obtained was 320ps fall down delay for input:
Where x represents the input signal

```
001111110011000111111111
000x0000000000000000000x        +
------------------------------------------
010101110011001100000000
```

7. References:

[1] APPAs: fast and efficient approximate parallel prefix adders and multipliers

[2] A Comparative Analysis of Parallel Prefix Adder